Chroma-Q™
Color Span™

User Manual

Version 2.0 March 2009
Software Version 1.6

PN: 617-0500

Disclaimer

The information contained herein is offered in good faith and is believed to be accurate. However, because conditions and methods of use of our products are beyond our control, this information should not be used in substitution for customer's tests to ensure that Chroma-Q products are safe, effective, and fully satisfactory for the intended end use. Suggestions of use shall not be taken as inducements to infringe any patent. Chroma-Q sole warranty is that the product will meet the sales specifications in effect at the time of shipment. Your exclusive remedy for breach of such warranty is limited to refund of purchase price or replacement of any product shown to be other than as warranted.

The colour of the extrusion and the colour of the end plates and feet might be slightly different because of the difference in the alloy material and the grain finish of the metal of the extrusion and the metal end plates and feet. This is valid for any colour including clear anodising/silver.

Chroma-Q reserves the right to change or make alteration to devices and their functionality without notice due to our on going research and development.

The Chroma-Q Color Span system has been designed specifically for the architectural lighting industry. Regular maintenance should be performed to ensure that the products perform well in the architectural environment.

If you experience any difficulties with any Chroma-Q products please contact your selling dealer. If your selling dealer is unable to help please contact support@chroma-q.com. If the selling dealer is unable to satisfy your servicing needs, please contact the following, for full factory service:

Outside North America:
Tel: +44 (0)1494 446000
Fax: +44 (0)1494 461024
support@chroma-q.com

North America:
Tel: 416-255-9494
Fax: 416-255-3514
support@chroma-q.com

For further information please visit the Chroma-Q website at www.chroma-q.com.

Chroma-Q is a trademark, for more information on this visit www.chroma-q.com/trademarks.

The rights and ownership of all trademarks are recognised.

LICENSED BY
COLOR KINETICS

Table of Contents

1. Product overview 3
1.1 Color Span IP20 fixture unit 3
1.2 Color Span IP67 fixture unit 4
1.3 Color Span power supply units 4
2. Operation 5
2.1 Unpacking the units 5
2.2 Cabling 5
2.3 Control 6
2.4 Technical specifications 9
2.5 Maintenance 10
3. Drawings 11
3.1 Color Span Fixture Units 11
3.2 Color Span Power Supply Units 13
Color Span PSU 2 13
Color Span PSU 6 13

1. Product overview

The Color Span is a configurable low profile, ultra bright LED cove lighting and wall wash system for wide ranging applications. The fixture gives lighting designers, specifiers and end users the flexibility to specify many aspects of its design to meet their particular application needs, including:

IP rating: Indoor (IP20) or outdoor (IP67) rated use
Body length: 400mm / 16", 800mm / 32" or 1200mm / 48"
Body colour: 10 colours, including stock Black, White or Silver
LED colours: RGBA, single colour Red, Green, Blue, Amber, Cool White, Warm White, or any colour combination
Optics: Narrow, medium or wide beam angles

This vast range of configurations, combined with a very powerful 1500 hot lumens output per 1.2m / 4 foot and ultra slim design, makes the Color Span suitable for a wide range of wall wash, cove, effects and feature lighting applications in the architectural and entertainment sectors.

As well as benefiting from the same high quality components and innovative LED technologies found in other leading Chroma-Q LED products, the fixture's highly efficient solid-state technology requires less power and maintenance compared to conventional luminaires, enabling it to wash a 21.6m / 72 foot long wall from just a single wall outlet.

- Configure the IP rating, body length, body colour, LED colours (4 circuits) and optics
- Low profile LED cove lighting and wall wash system
- Ultra bright - 1500 hot lumens per 1.2m / 4ft
- Choice of 6 & 18 way power supplies
- Smooth, linear dimming curve
- Optional RGBA *Magic Amber™ configuration
  * Magic Amber is the term used for the unit's ability to bring in Amber when mixing colours that require it

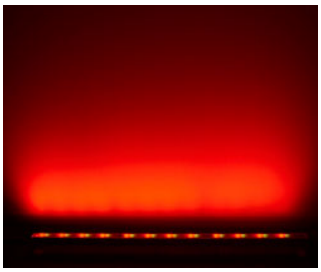

1.1 Color Span IP20 fixture unit

The Color Span IP20 fixtures come in lengths of 400mm / 16" with 16 high power LED, 800mm / 32" with 32 high power LED and 1200mm / 48" with 48 high power LED. Each fixture regardless of length and number of LED shall have a total of 4 channels all the time. (See illustration below) A fixture unit can be built to have a variety of LED colours for each of the 4 channels. The fixture enclosure units come in custom colours and are suitable for interior applications. The high-strength extruded and anodised aluminium construction offers complete protection and houses a discreet cable management.

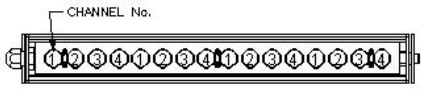

400mm (16") Color Span IP20 Fixture

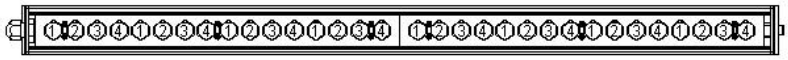

800mm (32") Color Span IP20 Fixture

1200mm (48") Color Span IP20 Fixture

1.2 Color Span IP67 fixture unit

The Color Span IP67 fixture is a sealed enclosure made of a heavier gauge anodised aluminium extrusion that is suitable for external applications. The units are available in custom colours, and come in lengths of 400mm / 16" with 16 high power LEDs, 800mm / 32" with 32 high power LEDs and 1200mm / 48" with 48 high power LEDs. Each fixture regardless of length and number of LED shall have a total of 4 channels all the time. (See illustration below). A fixture unit can be built to have a variety of LED colours for each of the 4 channels. (See illustration below) The cable system for a Color Span IP67 fixture shall be customised to suit the application requirements.

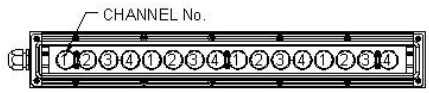

400mm (16") Color Span IP67 Fixture

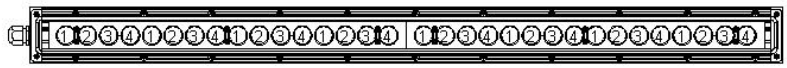

800mm (32") Color Span IP67 Fixture

1200mm (48") Color Span IP67 Fixture

1.3 Color Span power supply units

A range of DMX controlled power supplies are available to accommodate most applications. Each Color Span power supply features outputs via RJ45. The unit can be controlled remotely via ANSI E1.11 USITT DMX 512-A (XLR-5 pin).

The control options incorporate the latest HSI (Hue, Saturation and Intensity), RGB(A) (Red, Green, Blue with Magic Amber*), RGBA (Red, Green, Blue and Amber) control modes and a dynamic variable effects engine integrated in the software which gives the lighting designer full control over colour and effects combinations.

* Magic Amber is the term used for the unit's ability to bring in amber when mixing colours that require it

The RJ45 output connectors of the Color Span PSU units are colour coded to indicate the appropriate Color Span fixture units.

Output Colour Coding:

Output Colour Code	Number of LED	Fixture Length (in)	Fixture Length (mm)
Brown	16	16	400
Orange	32	32	800
Yellow	48	48	1200

The Color Span PSU 2 is a power supply with 2 outputs which can be configured for up to 2 full size (1200mm) 48 LED Colour Span fixture units, or 2 (800mm) 32 LED Color Span fixture units, or 2 (400mm) 16 LED Color Span fixture units.

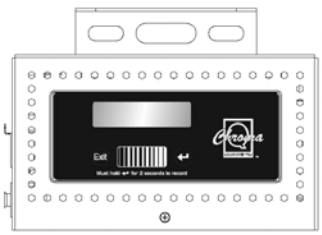

The Color Span PSU 6 is a power supply with 6 outputs suitable for up to 6 full size (1200mm) 48 LED Color Span fixture units.

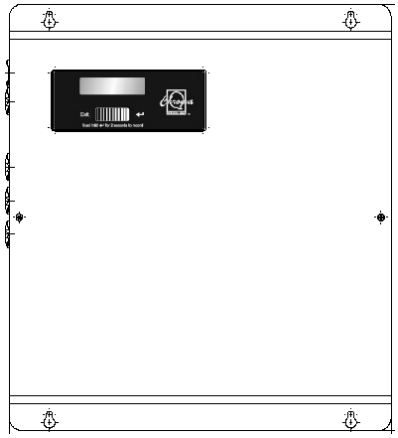

The Color Span PSU 18 is a power supply with 18 outputs suitable for up to 18 full size (1200mm) 48 LED Color Span fixture units and fits 2U 19" rack space.

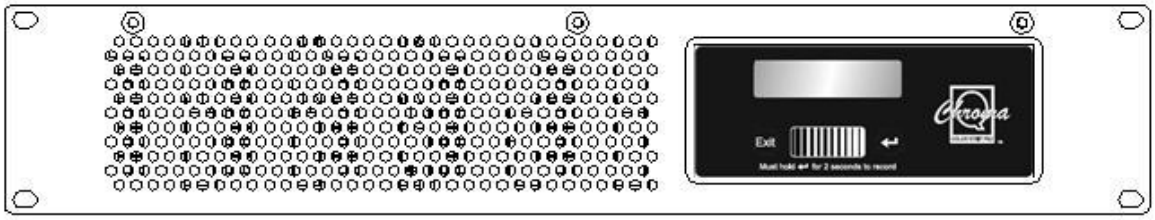

2. Operation

2.1 Unpacking the units

The Color Span fixture package includes 1 unit Color Span and 1 pair feet support.
The Color Span PSU 2 package includes 1 unit Color Span PSU 2 and an IEC power cord.
The Color Span PSU 6 package includes 1 unit Color Span PSU 6 and an IEC power cord.
The Color Span PSU 18 package includes 1 unit Color Span PSU 18 with a 1 metre trailing lead.

2.2 Cabling

The Color Span system utilises a CAT5 cable system with an RJ45 plug to supply power and data from the PSU to the LED fixtures. Each of the RJ45 outputs MUST supply power and data to a total of 48 LED. Each output supports a maximum distance of 60m / 200'.

RJ45 (Pin to Pin) Wiring Diagram:

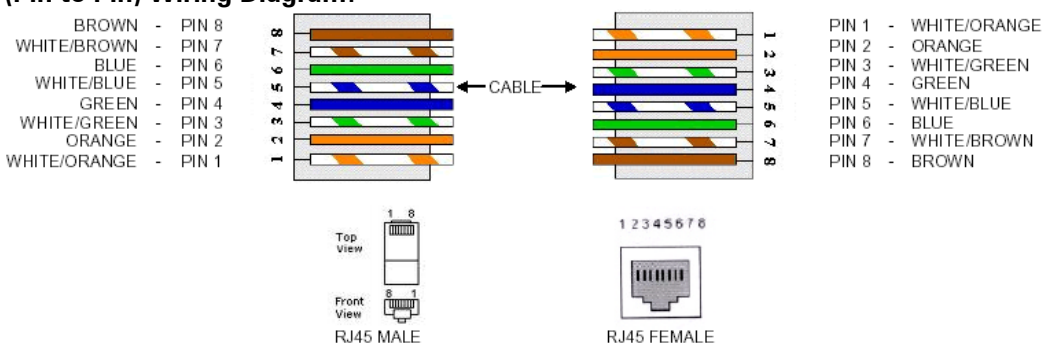

Output and Cabling Configurations

The RJ45 output connectors of the Color Span PSU units are colour coded to indicate the appropriate Color Span fixture units.

Output Colour Coding:

Output Colour	Number of LED	Fixture Length (in)	Fixture Length (mm)
Brown	16	16	400
Orange	32	32	800
Yellow	48	48	1200

Output Configurations:

PSU	Output Colour	Configuration
PSU 2	Yellow	2 outputs x (48 LED fixture) 2 outputs x (32 + 16 LED fixture) 2 outputs x (16 + 16 + 16 LED fixture)
	Orange	2 outputs x (32 LED fixture) 2 outputs x (16 + 16 LED fixtures)
	Brown	2 outputs x (16 LED fixtures)
PSU 6	Yellow	6 outputs x (48 LED fixture)
		6 outputs x (32 LED + 16 LED fixture)
		6 outputs x (16 LED + 16 LED + 16 LED fixture)
PSU 18	Yellow	18 outputs x (48 LED fixture)
		18 outputs x (32 LED + 16 LED fixture)
		18 outputs x (16 LED + 16 LED + 16 LED fixture)

Each of the RJ45 outlets of the PSU 6 and PSU 18 MUST supply 48 LEDs.

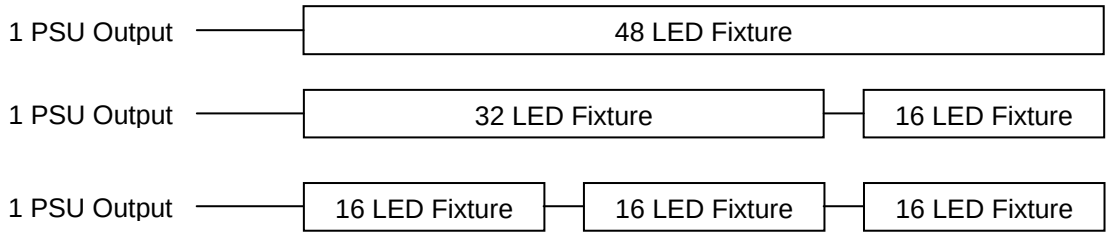

Note: Damage may occur to the fixture unit if it is not the appropriate size as indicated on each output connector of the PSU.

2.3 Control

The Color Span system can operate as a stand alone unit or controlled remotely via ANSI E1.11 USITT DMX 512-A signal protocol.

The Color Span power supply units can be set to operate in various modes. Single output, and all-grouped outputs are available with 5 control options: HSIFX, HSI, RGB(A), RGBA, RGB(A)I, pre-programmed looks and stand-alone effects.

The Color Span PSU 2/PSU 6/PSU 18 control menu items are accessed via the LCD display and the following controls:

- Right hand button (Arrow) = Enter (hold for 2 seconds to save). The display flashes before saving/recording.
- Left hand button (Exit) = Exit without saving
- Centre pressure slide pad = adjusts or scrolls through menu items

The LCD Screen shown to the right currently at the Home position displays: Product Name, Software Version, current DMX Address, current Control Mode and Time

Control menu

Use the pressure slide pad to scroll through the control menu positions:

→ **Home / DMX Address**
To set the DMX start address of the PSU 2/PSU 6/PSU 18, press Enter, scroll to adjust DMX start address, press Enter for 2 seconds to save.

→ **Control Mode**
The PSU 2/PSU 6/PSU 18 can be set to operate in various DMX controlled modes. The control options are HSIFx (Hue, Saturation, Intensity and Effects), HSI (Hue, Saturation and Intensity), RGB(A) (Red, Green, Blue with *Magic Amber), RGBA (Red, Green, Blue and Amber), RGB(A)I (Red, Green, Blue with *Magic Amber and Intensity), pre-programmed looks and standalone effects.

Press Enter, scroll to select control mode, press Enter for 2 seconds to save.

Color Span PSU 2, PSU 6 and PSU 18 Power Supply Unit			
Mode	**Ch**	**Grouping**	**Description**
1	61	Variable	7FX + 18 x HSI
2	54	Single	18 x HSI
3	54	Single	18 x RGB (with *Magic Amber)
4	9	All grouped	6FX + HSI
5	3	All grouped	HSI
6	3	All grouped	RGB (with *Magic Amber)
7	72	Single	18 x RGBA
8	72	Single	18 x RGBI (with *Magic Amber)
9	4	All grouped	RGBA
10	4	All grouped	RGBI (with *Magic Amber)
11	1	Any	Selection of pre-programmed looks
12			Stand-alone effects sequence
* Magic Amber is the term used for the unit's ability to bring in amber when mixing colours that require it			

→ **When DMX is Lost**
If DMX is not detected various output options can be selected: Press Enter, scroll to selection, press Enter for 2 seconds to save.
Off - will snap to off
Hold - will hold last valid DMX state
Trig - will default to Time Trigger operation
Look 1-42 - will snap to the Look of your choice

→ **Look Store**
The PSU2/PSU6/PSU18 has 42 internal FX Looks for standalone operation, 1-9 are preset. To replay a Look, press Enter and scroll through the Looks.
Note: DMX has priority over internal Looks.
Looks can be recorded to the internal flash memory by users and will be preserved on power down. However, looks will be returned to default setting if menu 8 Reset is performed. There are two ways to record a look:

1. Simple, with DMX console.
Set the PSU6/PSU18 to Control Mode 1. Use a DMX console to adjust the internal FX engine to create the desired effect. Scroll to Look Store and press Enter, scroll to desired Look and press Enter. Press Enter again for 2 seconds to save Look.

2. Advanced, stand alone. Set the PSU 2/PSU 6/PSU 18 to Control Mode 1.
Scroll to Look Store and press Enter, scroll to desired Look and press Enter to access the memory data. The data is presented as two numbers separated by a letter "c". The number to the left of the c is the channel number and to the right is the channel level. Scrolling the wheel will select the channel number. To edit the channel level, press Enter to toggle to the alternate number and use the scroll wheel to adjust the level (shown as 0-255). Press Enter to toggle back to the channel number. When the desired effect is created press Enter for 2 seconds to save Look.

→ **Time Triggers**
The PSU2/PSU6/PSU18 has real time triggering of the internal Looks. Press Enter and scroll to desired Time Trigger and press Enter. Press Enter to toggle between Day, Hour (24), Minutes and Look to be triggered, adjusting the setting with the scroll wheel as desired. Press Enter for 2 seconds to save settings. By default Time Triggers will occur on all 7 days unless specified. The triggers will only be activated when the feature "When DMX is Lost" is set to Trig.

→ **Set Day and Time**
Press Enter. Press Enter to toggle between Day, Hour (24) and Minutes, adjusting the setting with the scroll wheel as desired. When the Day and Time is set correctly press Enter for 2 seconds to save settings.

→ **Display Backlight (Displ. Backlight)**
The LCD backlight can be set to go off after 5 seconds of no activity. Press Enter, scroll wheel to On (permanently) or Off (after 5 seconds) and press Enter for 2 seconds to save setting.

→ **Reset to Default**
Press Enter for 2 seconds to reset all menu items to factory defaults. Factory defaults are: DMX address = 001, Control Mode = 1 (61 channels HSI+FX), DMX Lost = Hold, Looks = default, Time Triggers deleted, Display = On.

Control options

3 channel HSI (Hue, Saturation and Intensity) gives 2 colour channels for hue and saturation and a separate intensity channel. A separate definable intensity channel is particularly useful when creating intensity chases or when the grand master is used. The hue channel has 255 different colours available and the saturation channel specifies the saturation level of that colour. The saturation channel is fully saturated at full. White is achieved with the intensity channel to full and the saturation channel at zero.

3 channel RGB(A) (Red, Green, Blue with *Magic Amber) is the more traditional way of controlling colour changing LED fixtures. Each of the three control channels directly affects the intensity of the corresponding LED. Colour is mixed by adjusting the levels of the three primary colours. White is achieved with all channels at full.

3 channel RGB(A) + 1 intensity channel (Red, Green, Blue with *Magic Amber and Intensity) gives 3 control channels directly affecting the intensity of the corresponding LED – Red, Green, Blue with *Magic Amber, and 1 channel affecting the intensity of all RGB(A) channels.

4 channel RGBA (Red, Green, Blue and Amber) gives 4 control channels directly affecting the intensity of the corresponding LED – Red, Green, Blue and Amber. Colour is mixed by adjusting the levels of each of the four colours. White is achieved with all channels at full.

Internal FX engine: modes 1 and 4 incorporate a comprehensive internal FX engine with seven variable parameters to create an unlimited amount of unique lighting effects.

Descriptions for the effects channels included in the following modes:
Mode 1:
Ch1 – Grouping, variable grouping facility to run FX / within groups
Ch2 – Colour Speed, variable speed of colour scrolling
Ch3 – Colour Fan, variable fan of colour between / within groups
Ch4 – Colour Range, variable limit of spectrum range for colour scrolling
Ch5 – Colour Step, variable control of smoothness of colour scrolling
Ch6 – Intensity Effects, wide selection of intensity fading and snapping effects
Ch7 – Intensity Fan, variable fan of intensity effects

Mode 4:
Ch1 – Colour Speed, variable speed of colour scrolling
Ch2 – Colour Fan, variable fan of colour between / within groups
Ch3 – Colour Range, variable limit of spectrum range for colour scrolling
Ch4 – Colour Step, variable control of smoothness of colour scrolling
Ch5 – Intensity Effects, wide selection of intensity fading and snapping effects
Ch6 – Intensity Fan, variable fan of intensity effects

* Magic Amber is the term used for the unit's ability to bring in Amber when mixing colours that require it

2.4 Technical specifications

Color Span Fixture Unit (IP20 Version)

	1200mm fixture unit	**800mm fixture unit**	**400mm fixture unit**
Dimensions:	1258mm x 96mm x 54mm 49.6″ x 3.8″ x 2.1″	852mm x 96mm x 54mm 33.5″ x 3.8″ x 2.1″	446mm x 96mm x 54mm 17.6″ x 3.8″ x 2.1″
Weight:	2.77kg / 6.1lbs	2kg / 4.5lbs	1.1kg / 2.45 lbs
DMX protocol:	ANSI E1.11 USITT DMX 512-A		
Connectors:	RJ45		
Body material:	Aluminium extrusion		
Body colour:	Custom		
LED Heads:	48	32	16
Beam Angle:	12°, 18°, 40° (approx)		
Lamp life:	L70 up to 50,000 hours		
IP rating:	IP20		
Operating temperature:	0°C to 40°C		
Approvals:	EN55103-1, EN55103-2, ICES-003/FCC PART 15		

Color Span Fixture Unit (IP67 Version)

	48″ fixture unit	**32″ fixture unit**	**16″ fixture unit**
Dimensions:	1269mm x 101mm x 62mm 49.9″ x 4.0″ x 2.5″	862mm x 101mm x 62mm 33.9″ x 4.0″ x 2.5″	456mm x 101mm x 62mm 17.9″ x 4.0″ x 2.5″
Weight:	6.26kg / 13.8 lbs	4.7kg / 10.4 lbs	3.18kg / 7 lbs
DMX protocol:	ANSI E1.11 USITT DMX 512-A		
Connectors:	RJ45		
Body material:	Aluminium extrusion		
Body colour:	Custom		
LED Heads:	48	32	16
Beam Angle:	12°, 18°, 40° (approx)		
Lamp Life:	L70 up to 50,000 hours		
IP Rating:	IP67		
Operating Temperature:	0°C to 40°C		
Approvals:	EN55103-1, EN55103-2, ICES-003/FCC PART 15		

Color Span Power Supply Units

	Color Span PSU 2	Color Span PSU 6	Color Span PSU 18
Dimensions:	194mm x 140mm x 127mm 7.6″ x 5.5″ x 5″	405mm x 362mm x 91mm 16″ x 14.3″ x 3.6″	660mm x 483mm x 88mm 26″ x 19″ x 3.5″
Weight:	2.8kg/6.2lbs	9.4kg/20.6lbs	22.3kg/49 lbs
Power:	100-240V AC 50/60Hz auto-switching	100-240V AC 50/60Hz auto-switching	100-240V AC 50/60Hz auto-switching
Power consumption:	2.5A @ 110V AC; 1.75A @ 230V AC	7A @ 120V AC; 3.5A @ 230V AC	20A @120V AC: 10A @ 230V AC
Connector in/out:	RJ45	RJ45	RJ45
Power connector:	IEC power cord	IEC power cord	Trailing lead
Control:	ANSI E1.11 USITT DMX 512-A	ANSI E1.11 USITT DMX 512-A	ANSI E1.11 USITT DMX 512-A
IP rating:	IP20	IP20	IP20
Fuses:	250V - 3A 5 x 20mm spare included	6A 20mm spare included	Both live and neutral are fused 110V - 2 x 20A 1.25″ ceramic 220V - 2 x 10A 1.25″ ceramic
Cooling:	Ventilation required front, sides and top	1 x top mounted fan, ventilation required front and rear	5 x rear and 1 x side mounted fans, ventilation required front and rear
Approvals:	EN55103-1, EN55103-2, ICES-003/FCC PART 15 CAN/CSA-C22.2 No.60950-1-07, UL 60950-1		

2.5 Maintenance

With care, the Color Span system will require little maintenance. However, as the unit is likely to be used in a stage environment we recommend periodical internal inspection and cleaning of any resulting dust and cracked oil residue.

Do not spray liquids on the front or rear panel. If the front enclosure requires cleaning, wipe with a mild detergent on a damp cloth.

3. Drawings

3.1 Color Span Fixture Units

400mm IP20

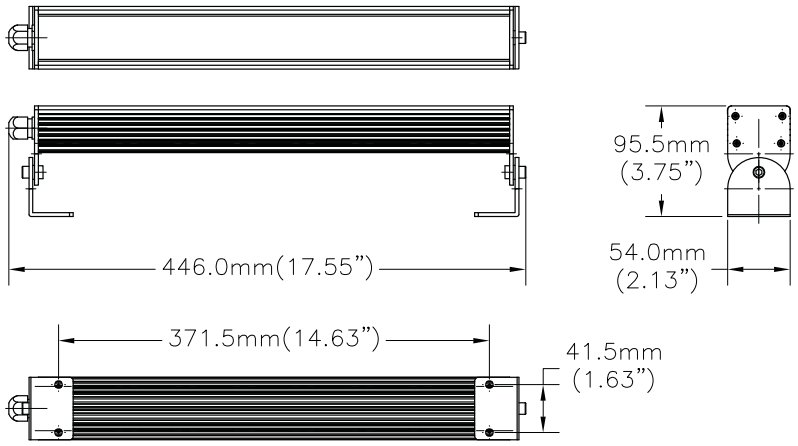

800mm IP20

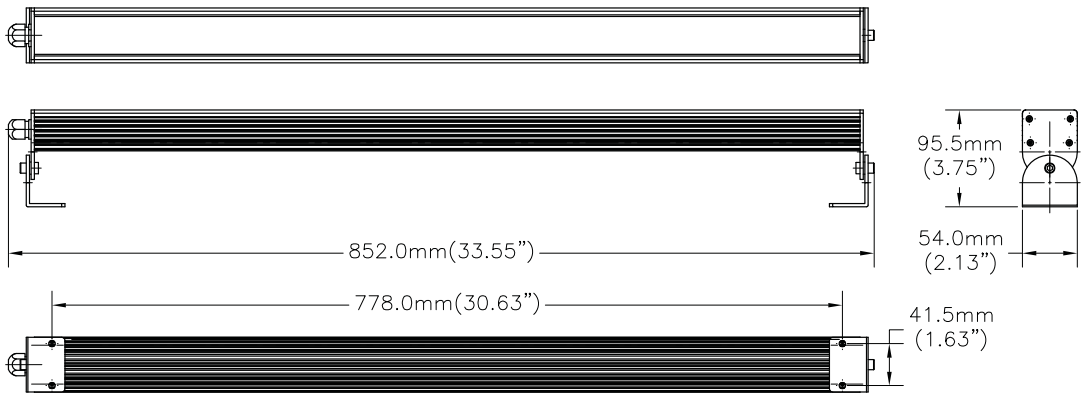

1200mm IP20

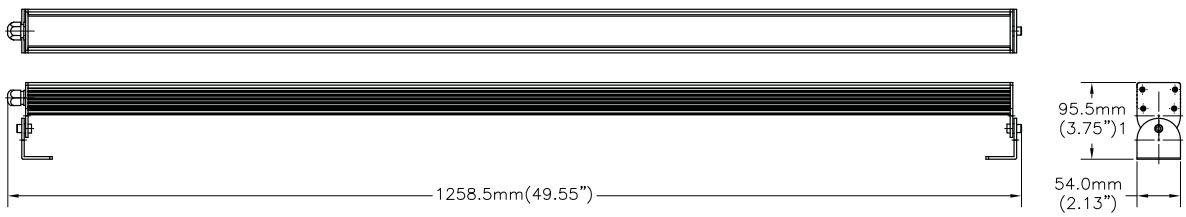

400mm IP67

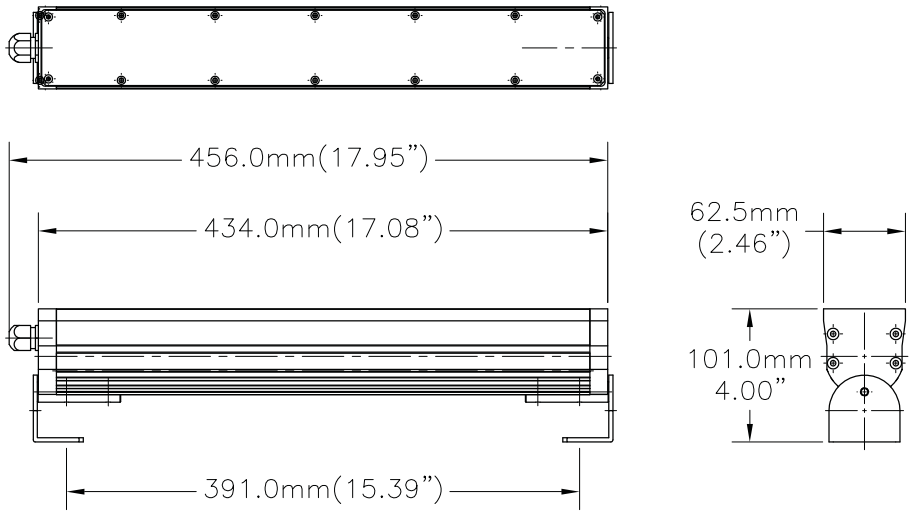

800mm IP67

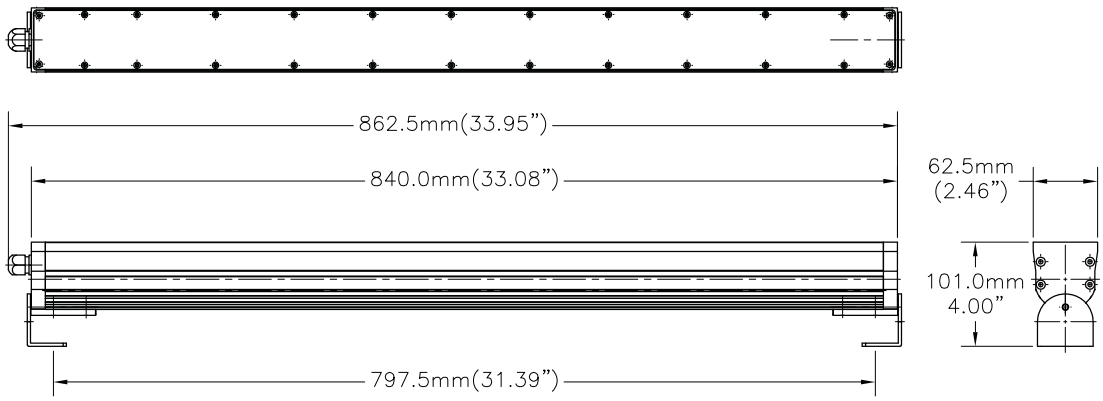

1200mm IP67

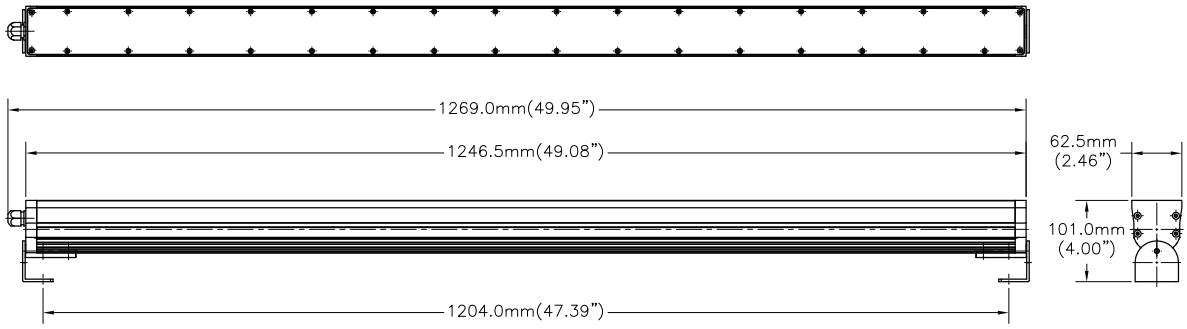

3.2 Color Span Power Supply Units

Color Span PSU 2

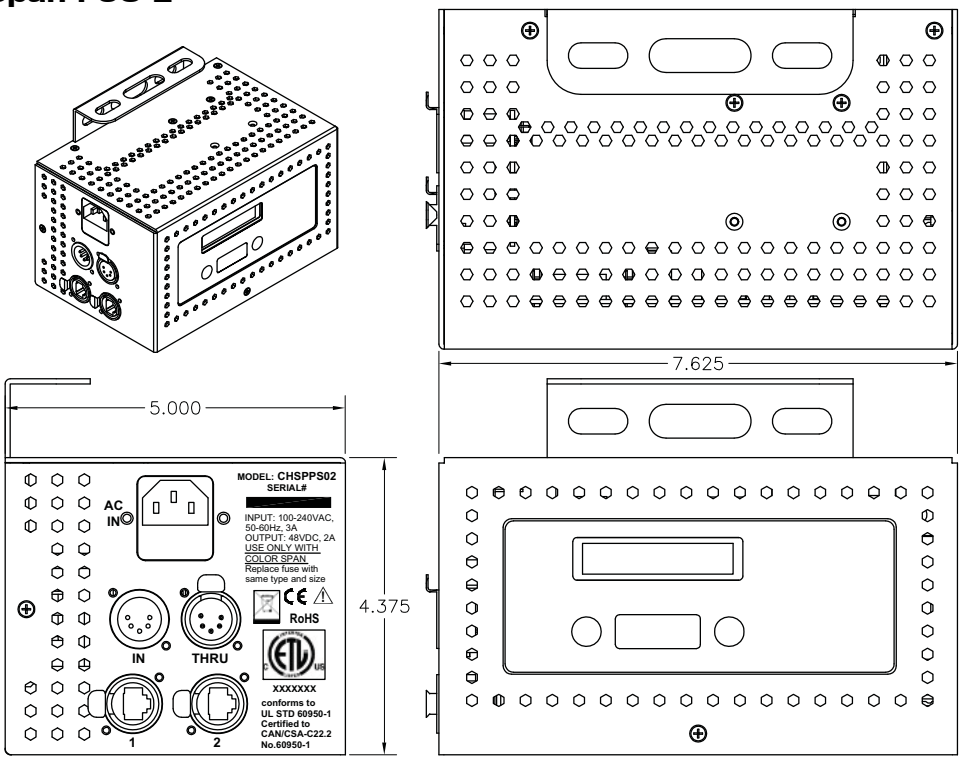

Color Span PSU 6

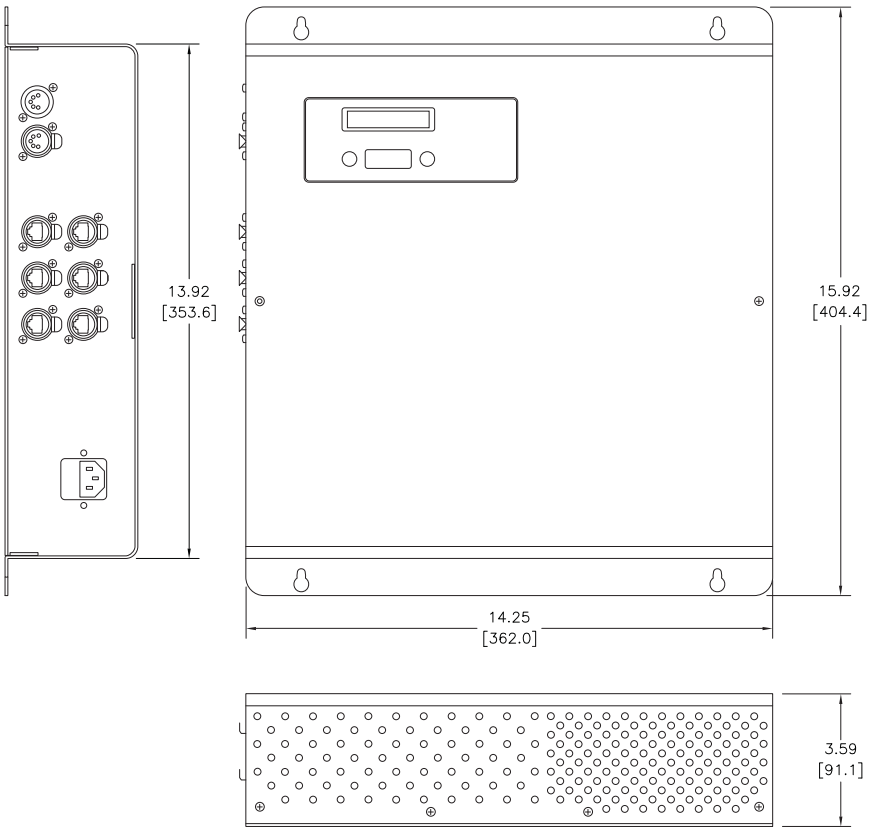
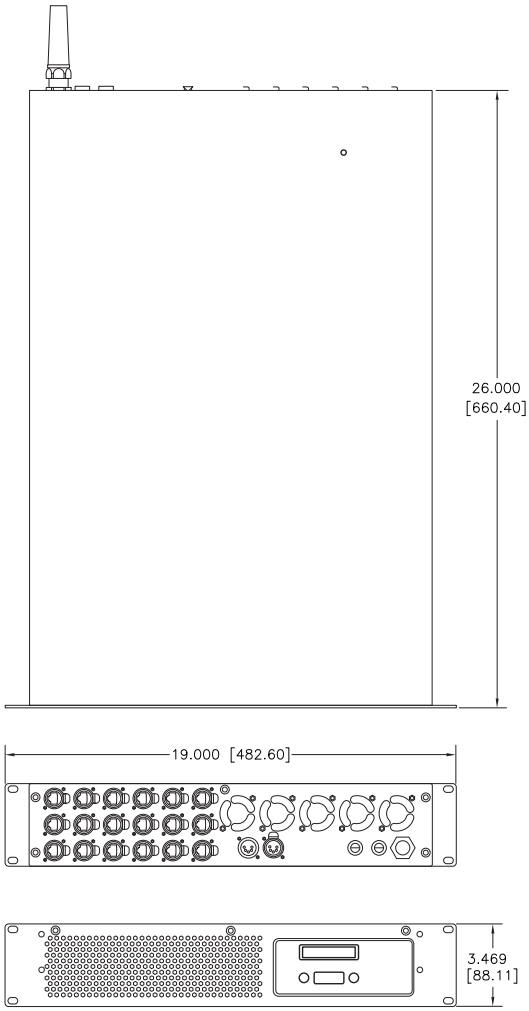
Color Span PSU 18